Recotherm
BREATHE THE DIFFERENCE

aeris 25

Owners Manual

UK DESIGNED AND BUILT

YEAR 3 WARRANTY Recotherm BREATHE THE DIFFERENCE

ENERGY eco EFFICIENT

YEAR 3 FIXED PRICE MAINTENANCE PLAN Recotherm BREATHE THE DIFFERENCE

THE SWIMMING POOL AND ALLIED TRADES ASSOCIATION SPATA

SafeContractor APPROVED

INDEX

Page 3	How it Works
Page 4-6	Construction
Page 7-8	Electrical Connections Required
Page 9	Installation Requirements
Page 10-11	Starting the Unit
Page 12-13	Commissioning the Installation
Page 14-15	Beijer Display
Page 16	After Sales Registration Servicing Warranty Maintenance Plans Retro Fit Items
Page 17	Troubleshooting
Page 18	Technical Details Table
Page 19	Electrical Diagram
Page 20	Electrical Diagram with Pool Water Heating

FRESH AIR VENTILATION

HOW IT WORKS

To understand how fresh air ventilation works you need to know the properties of air.

The air around us has moisture content. That is, it contains so many grams of water for every kilogram of air. The amount of water the air can hold is dependent on the temperature of that air. Air at 0°C has a maximum moisture content of 3.8 g/kg. If it contained that amount of water it would be said to be saturated i.e. 100% relative humidity.

It is important to appreciate that the term is relative humidity, and that it is relative to temperature. If the air was heated from 0°c to 15°c the relative humidity for the same moisture content would be 35% RH. So you can work out for yourselves that air at 0°c 100% RH would actually contain less moisture than air at 15 °C 50% RH. The moisture content inside a pool hall is very much higher than the fresh air. To give you an example, a typical pool with an air temperature of 30°c and relative humidity of 60% has a moisture content of 16.3 g/kg.

In the middle of the winter, on a cold day, the moisture content would be 3.8 g/kg. On those wet days in April the moisture content would be 10.2 g/kg, and on a summers day the moisture content is only 11 g/kg.

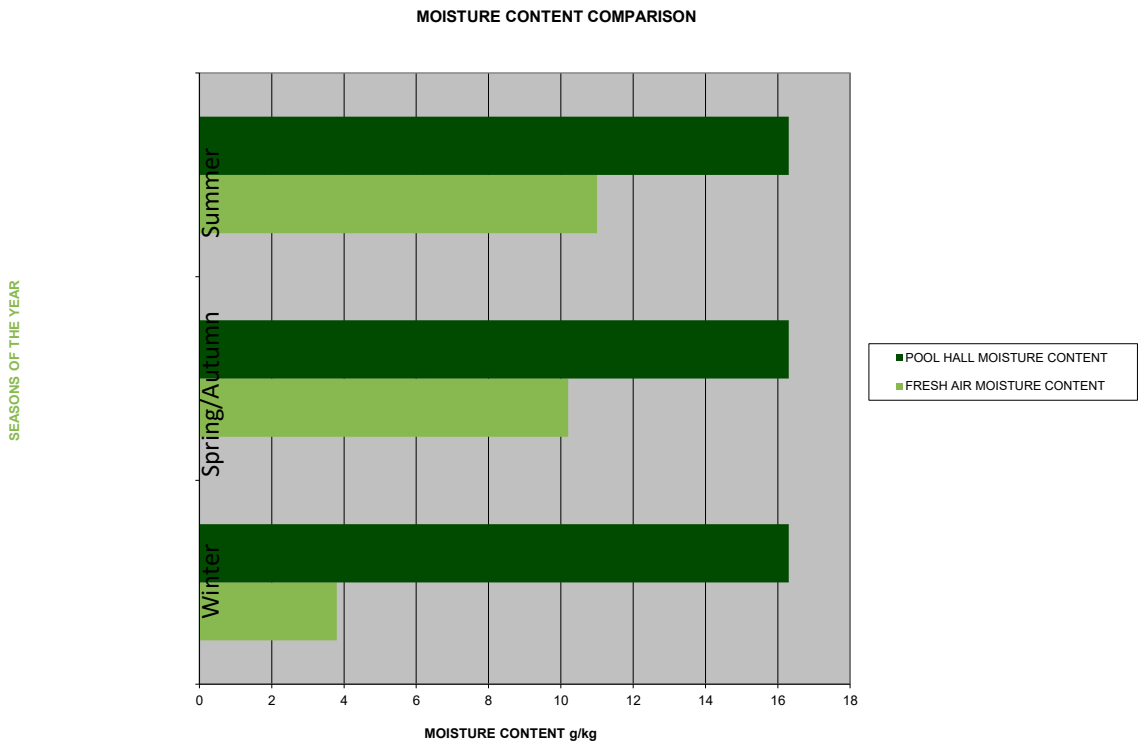

Referring to the graph above, it can be seen that throughout the year the fresh air has a lower moisture content than the air inside the pool hall. By introducing fresh air at any of these conditions it will lower the moisture content and thus the relative humidity within the pool hall.

But if you were to introduce the fresh air without any sort of control then the running cost for the system would be extremely high, so what you need to do is to introduce the precise amount of fresh air that is required and no more. This is what Recotherm have done with the Aeris unit.

The unit combines a number of energy saving techniques to reduce the overall energy bill.

CONSTRUCTION

The air handling unit assembly will comprise of one section.

Casework comprises of a series of double skin panels. These panels comprise of outer and inner skins manufactured from 20 gauge zintec sheet steel with a plastic coated outer face.

The inner and outer skins are formed into 23 mm thick trays and bonded to CFC free vacuum extruded phenolic foam insulation. Fixed panels are secured by means of self-tapping screws and sealed with a mastic sealant. Access panels are lift-off or hinge type, and held in position on compressible seals using “quick release" type fasteners.

SUPPLY AND EXTRACT FANS

The fans are high performance, backward curved, impeller energy optimized for installation without the spiral housing and mounted directly on to the motor shaft. The motor will be a synchronous motor with electronic commutation 1 phase IP55 standard DC motor. The whole assembly is located and fixed on to the unit’s reinforced insulated double skin panels.

The speed of the fan is controlled by the on-board microprocessor. By controlling the speed of the fans, the exact amount of fresh air that is required can be introduced so minimizing the heating load. But there is an even better reason for using the speed control. The lower the air volume, the lower the power consumption.

Not as you may expect a 20% reduction in air volume giving a 20% reduction in power consumption. A 20% reduction in air volume will give a 50% saving in power consumption

The following graph demonstrates this.

GRAPH SHOWING EFFECT OF SPEED ON POWER

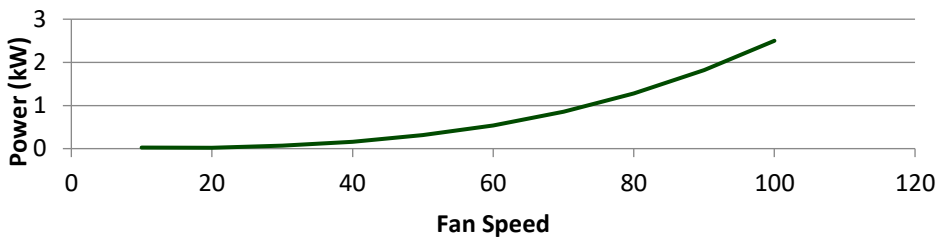

Graph B

RECUPERATOR

The recuperator is constructed from high purity acrylic coated aluminium plates, spaced no less than 4mm apart. This block is housed in a galvanized sheet steel casing coated with epoxy resin paint.

The recuperator is optimized in all modes of operation during the dehumidification process for pressure drop, efficiency and condensate drainage. The construction of the recuperator shall enable full efficiency over the complete unit width, and the highest efficiency over the entire range of outside air temperatures. The pressure drop through each recuperator air path shall not exceed the values shown in the performance specification table.

AIR FILTERS

Disposable dry panel G4 panel filters.

The filter holding frame has top and bottom channels fabricated from painted pre-galvanised steel, allowing side withdrawal of the filters.

The filter bank has a pressure switch fitted to provide a fault signal on the unit’s control panel, indicating dirty filter condition.

FROST PROTECTION

The unit is capable of operating down to an outside temperature of -15 Celsius (continuous) without any form of outside pre-heat.

HEATING SECTION

A Low temperature hot water heating coil within the unit will be constructed from 16mm OD seamless copper tube, mechanically bonded to aluminium fins. The tubes are mounted in a flanged and bolted galvanised mild steel casing.

A 2 port control valve is fitted within the unit or provided with the unit for site installation by the mechanical services contractor.

LPHW CONNECTIONS

The units heating coil needs to be connected into a L.P.H.W. boiler system, operating with a minimum flow temperature of 65°c flow and a return of 45°c. The units pipe connection sizes, heating coil duty; flow rate and hydraulic pressure drop are detailed in the chart below.

Model	F&R Pipe Size	Duty kW	Flow Rate L/s	Pressure Drop Kpa
AERIS 25	**22MM DIA. CU**	**7.7**	**0.09**	**5**

Units compatible with lower temperatures are available for use with ground and air source heat pumps, please specify your requirements when ordering.

The units are factory fitted or supplied with a three port fully modulating valve. Always ensure the L.P.H.W. circulating pump has sufficient duty to circulate the required flow rate against the hydraulic head necessary to overcome the resistance of the 3-way valve and heating coil. It is recommended that isolating valves be fitted into the L.P.H.W. flow and return connections to the unit.

CONDENSATE DRAIN

The unit is fitted with a 22 mm diameter drain connection this should be trapped using a 50 mm blow through trap before being run to waste.

HEAT DEMAND SWITCH

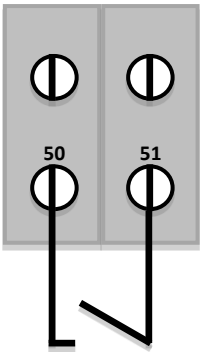

The Recotherm unit is provided with a heat demand switch to switch off the boiler and/or circulation pump during periods when heating is not required. A relay inside the unit will activate if heat is required, this relay is suitable for up to 240 Volts, but we recommend that if supplied with a high voltage that the cables are run via the local isolator or clearly marked as live even after isolation.
If other separate heating systems are fed from the same fuel boiler, i.e. radiators etc, then this switch would have to be wired in parallel with the contacts of any other motorised heating valves linked to the same fuel boiler. The use of the heat demand switch will also contribute to energy efficiency by switching off the boiler / heat pump during periods of no demand of heat.

The fuel boiler supplying heat to the Recotherm unit should not be governed by any form of time clock control. The Recotherm unit may call for heat from the fuel boiler at any time, day or night, and, if that heat is not available, then control of the pool hall environment will be compromised.

POOL COVER SETBACK

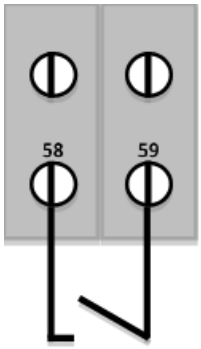

The unit is supplied with a setback facility that can be linked to the operation of the pool cover. When the pool cover is on the unit will reset the pool hall temperature to a lower level and switch off the supply fan if the set point conditions are achieved. The exhaust fan will run at 20% of its full speed to maintain a negative pressure in the pool hall, and to monitor the internal environment. Should the conditions deviate from the set points the controls will automatically restart the unit and run until the conditions have stabilized. If an automatic cover is in use this can be directly linked to the Recotherm unit, or if a manual cover is used, you can control this via a separate switch. Either way the switch must be totally volt free and mustn't be run in conduit with any other powered cables.

How to set up the pool cover setback

When the unit is supplied the pool cover set back facility is linked out on the terminal block (number's 58 & 59). You should remove the link and connect your **volt free** signal across the terminals.

The signal should be set up so that the switch is "closed" whenever the pool cover is off. Check the indication on the control panel to ensure that you have the switch working the right way around.

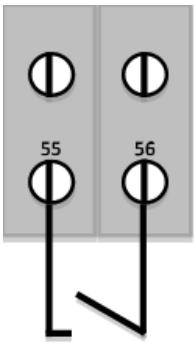

FIRE ALARM LINK

The unit's controller has a fire alarm link which can be integrated into a building management system. In case of a fire, a signal would be sent to the unit which would cause the fans to shut down by breaking the link between terminal's 55 & 56. By default, the unit is supplied with these terminals linked out. If you wish to use this facility, you should remove the link and connect your **volt free** signal across the terminals.

POOL WATER HEATING

The units have the facility to control the pool water temperature. The pool water temperature can then be read from the units display panel and adjusted in the same way as the air temperature.

To achieve this the contractor must install a two-port valve in the LPHW flow and return serving the pool water heat exchanger. A 24-volt actuator that takes 0-10 volt control signal would operate this valve.

Recotherm will provide the sensor. This sensor should be installed into the pool water pipework just prior to the heat exchanger and wired back to the panel on the unit via a 2-core screed cable.

This should be wired directly into the controller (See wiring diagram). The actuator on the valve will be served from the Recotherm panel by a three-core cable, these should be wired to terminal 17 (red) 19 (black) and directly into the expansion module for the 0-10 volts (contact the office if you haven't been given the addition wiring diagram with the pool water kit).

ELECTRICAL CONNECTIONS REQUIRED

MAXIMUM SUPPLY LOADS

The required electrical specifications are given within the 'Installation Services' document supplied with the unit. The Recotherm unit incorporates the supply fan motor and the extract fan motor. Both are synchronous motors with electronic commutation and therefore do not have starting current. When started from stop the current draw will gradually increase until it reaches its running current which will vary according to the pool hall temperature and humidity

SUPPLY VOLTAGE

The voltage limits indicated in the Electrical Specifications must not be exceeded. The correct voltage must be available under the Starting Load Current.

POWER CABLE SIZING

The Recotherm unit must be connected with the correct cable size. If the electrical cable size is too small, the voltage will be restricted and the internal electrical motors could be damaged. The cable supplying electricity to a machine with a given electrical load, must increase in cross sectional area, as the length increases in order that the voltage drop within the cable does not exceed the recommended limits.

EARTHING

The Recotherm unit must be electrically connected to an appropriate safety earth. Failure to do so presents an electrical shock hazard.

RCD

The mains power electricity supply to the Recotherm should be routed via a suitably sized Residual Current Device (RCD).
An RCD rating of 30mA is advised.
The purpose of the RCD is to protect against fatal electric shock to personnel, by reducing to safe levels the value and length of time a person is exposed to current flow through the body.
Equally the RCD will help protect plant and equipment from fires started by low fault currents passing from Live to Earth, that a normal fuse or circuit breaker may not detect.

CIRCUIT BREAKER

In addition to an RCD, the mains supply to the Recotherm unit must be protected by a Miniature Circuit Breaker (MCB).
An MCB is a circuit overload protection device similar to a simple fuse, but re-settable. On Three phase units a three phase MCB must be used.

ROUTING CABLES INTO THE UNIT

Two 20mm nylon cable glands are provided on the left or right hand side of the control panel to allow access to bring in mains power, and any external control cables into the unit. e.g. pool cover switch, pool water sensor, pool water control valve cables.
External cables should not be routed through the unit.

SWITCHING AND CONTROL

The unit requires a continuous mains power supply therefore no timeclocks or starter should be connected to the mains power supply. The unit shall be supplied with a control panel including a Trend IQ4E controller. Cabling to all control, regulation and drive components shall be built into the unit and factory tested. The control panel shall include terminals for main power supply, motor and control components, component isolators, safety circuits and all necessary components for motor control, including fuses and overloads. A terminal strip is provided for connections to external components and control signals. All potential free contacts suitable for 230v/2A.

IQ4E SYSTEM SOFTWARE

The function control, software and all aspects of control and regulation devices shall be tested.

A touch screen display will be provided to enable communication with the IQ4E controller and clearly show the following functions:

- Unit on/off
- Pool hall temperature set point
- Pool hall humidity set point
- Pool cover switch
- Minimum speed
- Manual override switch
- Manual speed control
- Manual Heating valve position

AIR VOLUME REGULATION

Air volumes shall be automatically adjusted to ensure that the pool hall remains under a constant negative pressure. The fan motor speeds shall be automatically adjusted in order to maintain the programmed internal conditions.

INSTALLATION REQUIREMENTS

Offloading

The installer is responsible for offloading and positioning the unit. It must be kept level and not laid on their sides or ends.

If offloading or moving using a fork lift truck, ensure that the forks extend across the whole width of the unit to prevent damage to the underside. (i.e. the forks must support the unit base frame on both sides of the unit). Units must not be tilted more than 15 degrees in order to prevent damage to fans and other components.

Storage

The packing and protection provided is for transport purposes only and so indoor storage is essential. Additional protection must be provided until the installation is complete.

Positioning the unit

The unit should be supported across its entire perimeter, and should be installed level (+/- 3mm along unit length). A clear area equivalent to 80% of the unit width should be left on the service access side.

There are eight different layouts for both the vertical and the horizontal units. When ordering you should specify the model you require and which layout you need.

The resistance of the ductwork system should not exceed the maximum permissible figure shown on the technical schedule. The exhaust air and fresh air louvers should be sited to ensure that as little air as possible is re-circulated. It may be necessary in certain installations to fit a physical barrier between the two discharge louvers.

Careful consideration should be given to the supply air ductwork system to ensure that the distribution of the air does not suffer when the volume is reduced. For the best results the air should be discharged as close as possible to the area where the condensation is likely to form. In a well-insulated building this would normally be the glazed area. The return air would normally be from a single point. It isn't necessary to have an extensive return air ductwork system.

SOUND DATA

Although the units are inherently quiet when on low load, you may require some form of sound deadening, particularly on the return air system which tends to be quite simple and therefore more prone to noise. The following table gives dBA sound power rating levels for each unit.

	63	125	**250**	500	**1K**	2K	**4K**	8K
AERIS 25								
Supply fan	62	61	65	63	63	62	55	51
Return fan	60	57	57	57	52	49	45	42
Panel Transmission loss	-20	-20	-26	-31	-34	-37	-35	-62

STARTING THE UNIT

The Recotherm unit has been pre-commissioned in the factory, unless the unit was flat-packed on site, so it is ready to start as soon as the mains supply is connected. The unit can only be properly operated when all the installation services are complete i.e. electrics, air distribution duct-work, pool, boiler circuit pipe work etc. If required you can start the unit when the pool is empty but you should not run the unit until the site is clean and free from builders' dust because this will clog the filters and could cause damage to the electrical components.

Before connecting the mains electricity supply to the Recotherm unit, the following procedure should be followed:

CHECK ELECTRICAL SAFETY

- Check correct and good earth connection.

- Check rating and operation of RCD and MCB breakers.

AIR FILTER

Ensure that the fresh air filter is in place and that it is not obstructed by dust or debris.

DUCT WORK

Ensure that the air ducts are fitted and are clear from obstruction, check all the supply air grilles are open. Ensure that the fresh air, exhaust air and return air grilles are installed correctly and free from obstruction.

If any air or fire dampers are fitted within the duct work or grilles, ensure that these are open.

SWITCH ON FUEL BOILER

Ensure that the fuel boiler and associated circulating pump is ready to function.
If the fuel boiler is activated by the heat demand relay in the Recotherm unit it will not start until the fans are switch on.

SETTING THE CONTROLS

Check the controls on the Recotherm unit are set as listed in 'Initial Control Settings' (these are factory pre-set).

ACCESS PANELS

Ensure that all access panels on the unit are securely fitted in place.

SWITCH ON ELECTRICAL MAINS POWER TO UNIT

The touch screen control panel will start and go through its pre-checks before showing.

At this point the fans may start, if they don't press login and use the password provided by Recotherm, press next then go to favourites and select unit on/off. Switch the unit on.
The fans will start to wind up to the appropriate operating speed depending on the conditions, the valve will modulate to the required positions and the unit is in operation.

FANS

During start-up check the following:

1. Check the direction of rotation (rotation direction arrow on the fan blade, impeller base plate or support plates on suction side or rating plate).
2. Check for quiet, low vibration operation. Strong vibrations due to erratic operation (unbalanced), e.g. caused by transportation damage or improper use, can lead to failure.
3. A-rated sound power levels of over 80 dB(A) are possible
4. If resonance vibrations occur, it is possible to hide certain speed ranges (Motor Setup or Add-on module).
5. Fans from ZIEHL-ABEGG SE are delivered balanced in accordance with DIN ISO 21940-11 for the appropriate fan category in accordance with ISO 14694. Check the fan for mechanical vibrations after installation. If the limit values of the corresponding fan category are exceeded in start-up, you must have the motor/impeller unit checked by an expert and rebalanced if necessary, before continuous operation is permitted.

COMMISSIONING THE INSTALLATION

ELECTRICITY

If the electrical supply to the unit is 3 phase in nature, then the fans should be visually checked to ensure that they are rotating in the correct direction:

- Connect the electricity to the Recotherm unit, and switch the unit "on" (See Display panel log in).
- Switch the unit off on the display to stop it.
- Remove the fan access panels and watch as the fan slows to halt.

If the fan rotation is incorrect, it will be necessary for the electrician to swap over the connections of the mains supply electricity cables until the correct phase orientation is established.

VOLTAGE SUPPLY:

The electrician should ensure that, with all equipment running, that the voltage supplied to the Recotherm unit falls in line with the minimum requirements as listed under 'Electrical Specifications'.

AIR DUCT WORK

Check that there is appreciable air flow from all grilles. Check that any air discharge grilles within the pool hall are angled correctly and diverting air onto areas of glazing.

BOILER OPERATION

Login to the touch screen display (see below) and then go to Control browser, scroll down to heat demand, if the unit is calling for heat then the heat demand will be ON, check that the boiler is operating, if it isn't you may need to check the electrical connections.

The boiler water is simply re-circulated through the Recotherm unit via the three-port valve, then back to the boiler. The boiler water is pumped around this closed circuit by the boiler circulating pump, which will normally be located either close to the boiler, or actually inside the boiler.

After a short time, the copper pipe work from the boiler through the unit should become very hot.
The temperature of the water will vary depending on the type of boiler, older boilers operate at a temperature of 80°C, whilst condensing boilers operate at a temperature of 65°C, either temperature would feel hot to the touch. If the heat source is from a heat pump then the water could be supplied anywhere from 55 to 40 °C, this would feel warm to the touch. As standard the units are supplied with a heating element suitable for 65 flow 45 return, which is the normal operating temperatures of a condensing boiler. If you are not using a condensing boiler then this should be communicated to Recotherm at the design stage. The fuel boiler supplying heat to the Recotherm unit should not be governed by any form of time clock control. This also applies to the boiler water circulating pump.
The unit may call for heat from the fuel boiler at any time, day or night, and, if that heat is not available, then control of the pool hall environment will be compromised.

If the water entering the unit is hot, but the water leaving the unit is cold, you may have a problem with water flow which could be caused by imbalance in the distribution system, pump failure or air locks.

Air venting:
If air is present within the boiler water pipe circuit, then this may restrict the flow of heat from the boiler to the unit and cause the problems described above. There should be air vents positioned at high points around the boiler pipe work circuit, and there is an air vent positioned on the top of the air heating coil within the unit.

Caution: Very hot water may be sprayed from the air vents and due care must be taken to avoid scalding and eye damage. Please wear appropriate PPE.

Once the boiler circuit is confirmed to be operating correctly, the air discharged into the pool hall by the unit should be noticeably warm.

ABOUT THE WARMING UP PERIOD

Once the Recotherm unit is running, the temperatures and humidity within the pool hall will start to be controlled.

Air temperature:
Air can be heated up comparatively quickly and, therefore, the pool hall air can be heated up to the required temperature within a matter of minutes.

If the air heating control is 'ON', the air being discharged into the pool hall will feel notably warm.
If the pool hall structure is well insulated, then the air will tend to hold its temperature with minimal heating.

Humidity levels:
With a new building it will take around two weeks to properly dry the structure and this may temporarily affect the pool hall humidity.

During the warm up period, most of the available heat will be transferred into the pool water at the expense of the air. If the pool does not have a surface cover in place during the warm up period, then the correct temperature balance will not be sustained during this period and temporarily high humidity levels may be anticipated.

Seasoning of wood & plaster:
With a new pool hall construction, when the Recotherm unit is first switched on and the pool hall air heated, the humidity levels could become very dry until the pool water reaches normal temperature.
Any wood used within the construction of the pool hall should be suitably treated in consideration of the possible variation in humidity levels and temperatures within the pool hall. Wood is a 'living' material and unsuitably treated wood can be expected to move, shrink or twist. Likewise, new plaster will initially contain a lot of water and, if dried too quickly, could crack. If in doubt, set the
pool hall air temperature at no more than 22C to help slow the drying process.

CONTROL SETTINGS

With a new installation, it could take around 10-14 days for the system as a whole to balance and stabilise and no control adjustment is advised during this initial period.

If these conditions are acceptable then the controls on the Recotherm unit will require no further adjustment, and the respective settings of the controls should be noted down for future reference.
If you need to operate the system at conditions not yet obtained, then adjust the controls accordingly.

LOG IN

You will only be asked to login when entering the ***Value Monitor*** page, this is primarily used by engineers, at this time a pop-up box will appear for you to enter a ***User*** and ***Password***.

To Log In:
Touch ***User***. ***Owner*** and ***Engineer*** will now be displayed.

Touch ***Engineer***.

Touch the ***Password*** box.

The key pad is now displayed.

Touch the characters to enter the password. (back arrow) clears existing text. (caps) swaps between upper and lower case. (AltGr) accesses accented characters.

Touch ***ok*** and you will be logged in. Your home page will be displayed.

LOG OUT

The Beijer display will automatically log any user off after the idle timeout time of 5 minutes has passed.

TO VIEW A GRAPH FROM THE SENSORS

The data logged in the controller can be viewed as a graph providing it is being logged in the controller.

To view a graph:

1. Touch ***Graphs*** from the options at the bottom of the screen.
2. Touch ***Legend*** to identify which graph is which.
3. Touch ***Engineering graphs***, from there you can select a live value of the graphs or select ***History*** to see back.
4. A box will appear labelled ***History Time Settings.*** Here you can select a start and end time/date to suit when you would like to monitor.
5. Touch ***Back*** then ***Home*** to display sensor readings.

ADJUST VALUES

To adjust a knob:

1. Touch the sensor reading of the knob you'd like to adjust. A figure will now pop up.
2. Touch the number. A keypad will now appear.
3. Type in the required value and tap the enter button.
4. The knob has now been changed.
5. Touch close.

Alternatively you can touch ***Set Points*** at the bottom of the display and follow the same procedure as above.

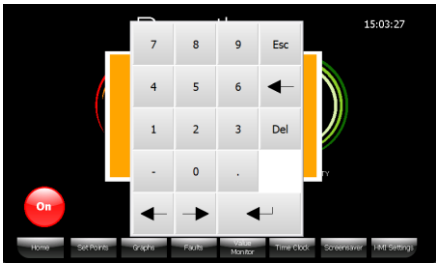

FAULTS

If there is a fault on the system a red circle will appear in the top left corner. If the fault has been rectified the circle will be green.

1. Touch ***Faults*** at the bottom of the screen.
2. Those displayed in red a present and those in yellow are faults that have now been rectified.
3. Touch ***Ack All***
4. All rectified faults will now turn white and any that are still present will turn green.

AFTER SALES

We understand that while an AHU may be tucked away in a plant room or placed outdoors, it's the cornerstone of your pool's comfort and environment. Without it, you risk issues like condensation, black mould, poor air quality and even structural damage. By ensuring your AHU remains in top condition, you can maintain the luxurious, spa-like experience you deserve in your pool hall.

REGISTER

Please register your unit by visiting https://recotherm.co.uk/warranty-register/

You will be asked for your Unit Serial Number, found near your control panel and date of delivery, if you do not have these details please leave blank and continue with the registration, we may need to contact you for further information.

SERVICING

We recommend a service by Recotherm be carried out annually (this may increase to bi-annually depending on usage, ie for commercial installations)

Proper maintenance by trained and experienced engineers is essential to keep your unit operating at peak performance. During each service visit, our engineers meticulously inspect and fine-tune every component, restoring the unit to its original commissioned condition. This prevents undue stress, minimises energy costs, reduces downtime and protects your investment.

WARRANTY

At Recotherm, we stand behind the quality and longevity of our Air Handling Units (AHUs) with our 3-year manufacturer's warranty. This is valid only when combined with a 3-Year Fixed Price Maintenance Plan.

If you choose not to take advantage of the Maintenance Plan initially, your unit will be protected by an Installer's Warranty for up to 12 months from commissioning or 18 months from delivery, whichever is shorter

MAINTENANCE PLANS

Maintenance plans are available at any point during the life of your Recotherm Unit. They offer a fixed annual service fee for the period and flexible payment options. When taken out on a new unit they also validate the 3-Year warranty period.

RETRO FIT ITEMS

SCENT SOLUTION

Provide spa fragrances to your pool hall via the ventilation.

REMOTE MONITORING

Enables you like to control your pool hall ventilation remotely, including the temperature, humidity and Pool Cover. Remote monitoring also enables Recotherm to log in remotely to provide enhanced technical support without a call out visit, potentially reducing down time.

Please get in touch with us on 01527 894533 or sales@recotherm.co.uk if you would like to learn more about any of our after sales services.

TROUBLE SHOOTING

Fault	Issue to Check For	Fix
Unable to see settings on display	Display not logged in	Log in as owner and use password 'vent'
Fault Light On	Unit is switched off	Switch on unit and log in
	Air Filter Dirty	Contact Recotherm to arrange service
	Sensor 'out of limits'	Sensor has failed please contact Recotherm for assistance
	Fan Fault	Fan has failed please contact Recotherm for assistance
Condensation in Pool Hall	Unit is off	Switch on unit and log in
	Fan Failed	Check for fan fail light and contact Recotherm for Assistance if showing
	Boiler/Pump Failed	Check if pipes to side of unit are both cold or warm. If cold please seek assistance with your boiler.
	Our heating actuator has failed	Check if both pipes are red hot, if so please contact Recotherm for Assistance.
	Humidity set point is too high	Please adjust setting to 60%
Display is Blank	Power to isolator has failed.	Tripped on main distribution board.
	Breaker tripped in our unit	Please contact Recotherm for Assistance.
	Display has failed	Please contact Recotherm for Assistance.

TECHNICAL DETAILS OF VARIABLE FLOW HIGH EFFICIENCY SWIMMING POOL VENTILATION UNITS

MODEL MK2		AERIS 25
Nominal air volume	m3/s	0.25
Maximum	kg/h	13.8
Dehumidification	kg/h	5.4
Effect kg/hr	kg/h	12.1
Supply fan motor	kW	0.76
Sound power level	dBA	68
External resistance	Pa	100
Maximum external resistance	Pa	300
Return fan motor	kW	0.76
Sound power level	dBA	58
External resistance	Pa	100
Specific fan power	w/l/s	0.407
Maximum external resistance	Pa	300
Recuperator nominal Eff	%	70
LT.LPHW Coil duty	kW	7.09
LT.LPHW flow rate	l/s	0.09
LT.LPHW pressure drop	kPa	7.8
Min fabric loss capacity	kW	4.06
Power consumption(full speed)	kW	0.25
Power consumption (half speed)	kW	0.03
Full load current (single phase)	Amps	1.2
Full load current (three phase)	Amps	N/A
Length	mm	1100
Width	mm	548
Height	mm	900
Weight	kg	150
Duct connection sizes (H x L)		
Fresh air inlet	mm	270 x 466
Supply air outlet	mm	200 x 300
Return air inlet	mm	300 x 300
Exhaust air outlet	mm	150 x 400

1) Winter fresh air at 0 ^{O}C 100% RH Pool hall condition 30 ^{O}C 60% RH
2) Summer fresh air at 28 ^{O}C 47% RH Pool hall condition 30 ^{O}C 60% RH
3) Average fresh air at 8 ^{O}C 80% RH Pool hall condition 30 ^{O}C 60% RH

BREAKER SCHEDULE		
AERIS 25 + SINGLE PHASE	RATING	TYPE
MCB1	4A	LOVATO P1 MB C4
MCB2	6A	LOVATO P1 MB C6
MCB3	6A	LOVATO P1 MB C6
MCB4	1A	LOVATO P1 MB C1
MCB5	1A	LOVATO P1 MB C1

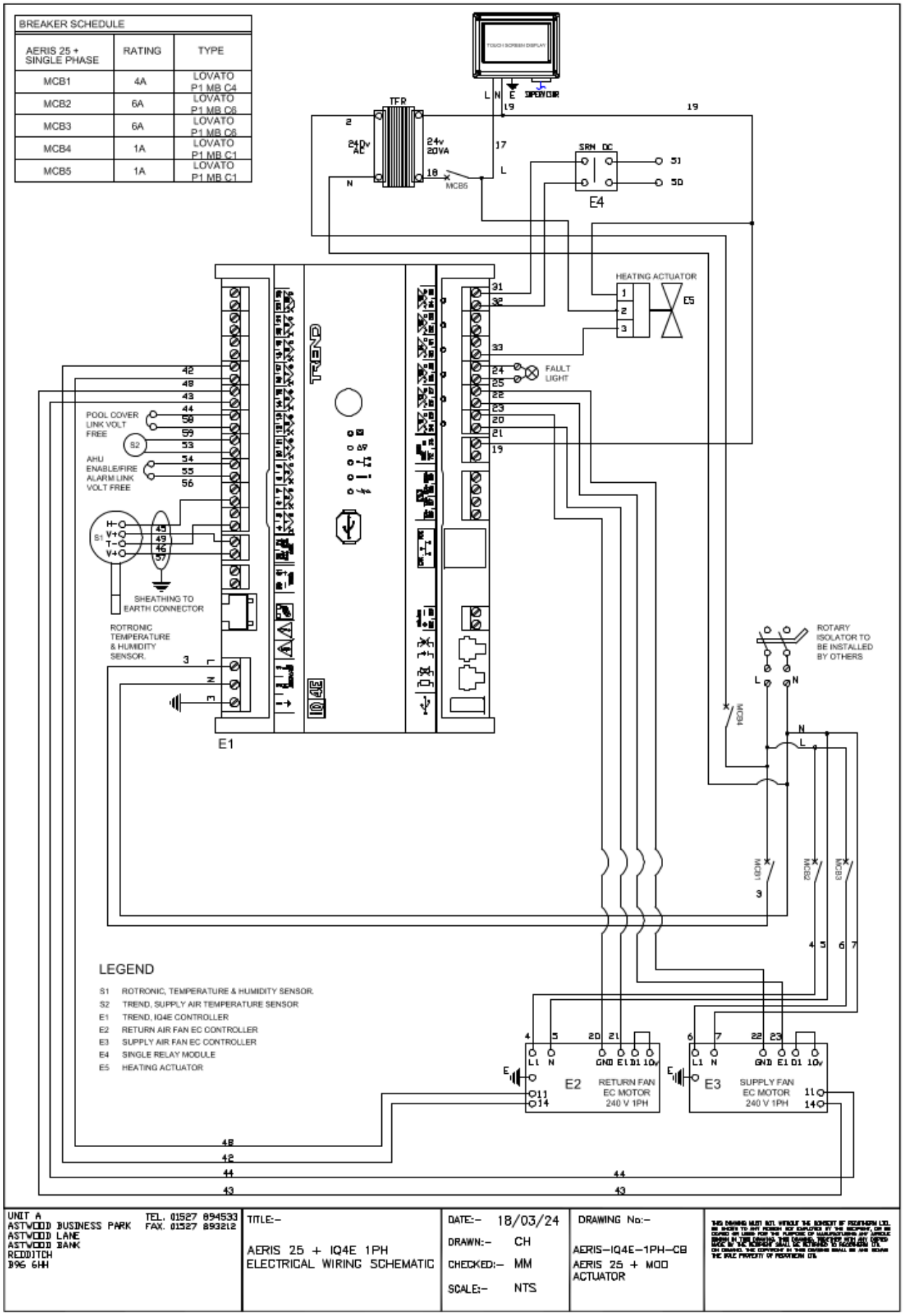

UNIT A ASTWOOD BUSINESS PARK ASTWOOD LANE ASTWOOD BANK REDDITCH B96 6HH	TEL. 01527 894533 FAX. 01527 893212	TITLE:- AERIS 25 + IQ4E 1PH ELECTRICAL WIRING SCHEMATIC	DATE:- 18/03/24 DRAWN:- CH CHECKED:- MM SCALE:- NTS
DRAWING No:- AERIS-IQ4E-1PH-CB AERIS 25 + MOD ACTUATOR	[illegible]		

BREAKER SCHEDULE		
AERIS 25 + SINGLE PHASE	RATING	TYPE
MCB1	4A	LOVATO P1 MB C4
MCB2	10A	LOVATO P1 MB C10
MCB3	10A	LOVATO P1 MB C10
MCB4	1A	LOVATO P1 MB C1
MCB5	1A	LOVATO P1 MB C1

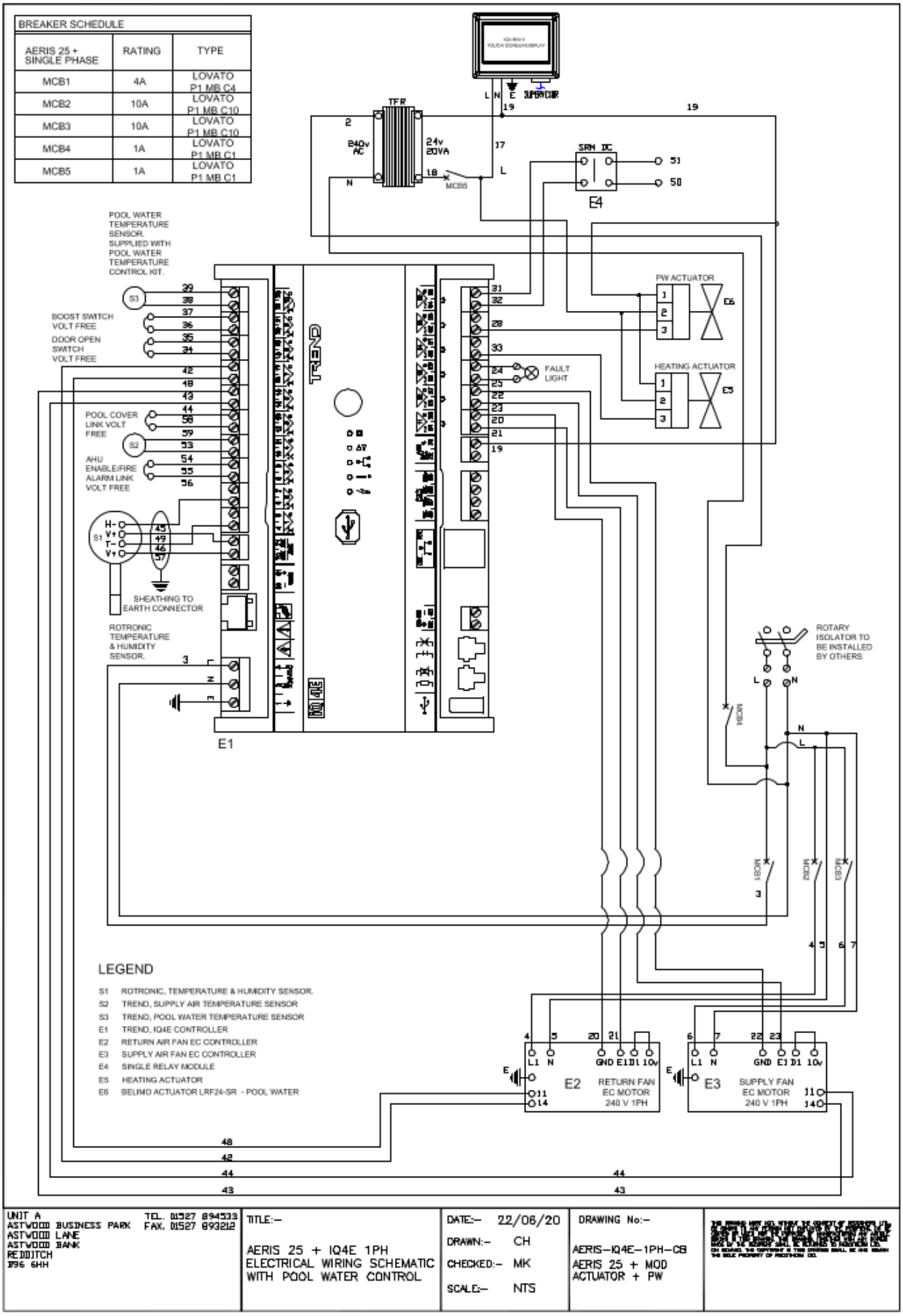

UNIT A ASTWOOD BUSINESS PARK ASTWOOD LANE ASTWOOD BANK REDDITCH B96 6HH TEL. 01527 894533 FAX. 01527 893212	TITLE:– AERIS 25 + IQ4E 1PH ELECTRICAL WIRING SCHEMATIC WITH POOL WATER CONTROL	DATE:– 22/06/20 DRAWN:– CH CHECKED:– MK SCALE:– NTS	DRAWING No:– AERIS–IQ4E–1PH–CB AERIS 25 + MOD ACTUATOR + PW

Visit our website, simply scan the code using your phone's camera or go to **recotherm.co.uk**

sales@recotherm.co.uk
01527 894533

facebook.com/Recotherm
linkedin.com/company/Recotherm-limited
pinterest.co.uk/recotherm

Unit A, Astwood Business Park
Astwood Lane, Astwood Bank
Redditch, B96 6HH

Recotherm
BREATHE THE DIFFERENCE